Infinova®

V1700 Series
Super Domes Installation Guide

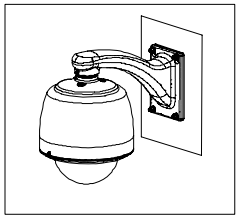

Wall Mounting

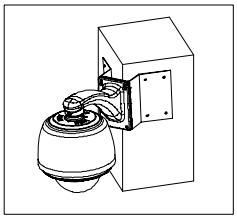

Corner Mounting

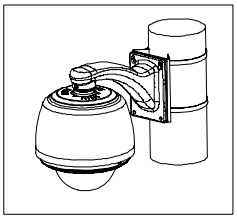

Pole Mounting

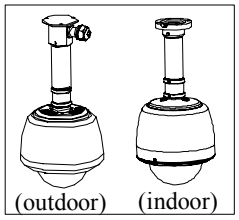

Pendant Mounting

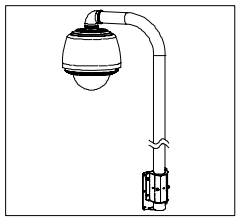

Over-roof
Side Wall Mounting

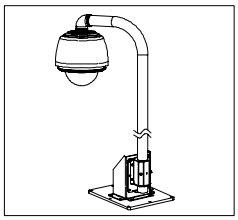

Over-roof horizontal
surface Mounting

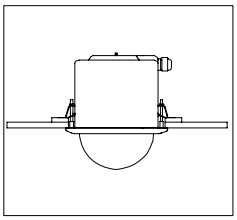

Ceiling Mounting
(indoor)

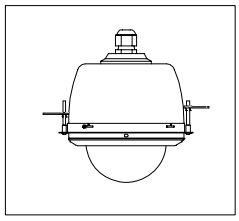

Ceiling Mounting
(outdoor)

This manual addresses the installation procedures of Infinova V1700 series Super Domes. The domes feature an all-in-one design and compact structure that makes its installation an easy and time-saving job.

Please familiarize yourself with the instructions and guidelines discussed in this manual before attempting to install your super domes.

Notice

Copyright Statement

This manual may not be reproduced in any form or by any means to create any derivative such as translation, transformation, or adaptation without the prior written permission of Infinova.

Infinova reserves the right to change this manual and the specifications without prior notice. The most recent product specifications and user documentation for all Infinova products are available on our website www.infinova.com.

Trademarks

Infinova® is a trademark of Infinova.

Copyright © 2000-2009 Infinova. All rights reserved.

All other trademarks that may appear belong to their respective proprietors.

FCC Warning

The super domes comply with the FCC rules.

Operation is subject to the following two conditions.

- This device may not cause harmful interference.
- This device must accept any interference received, including interference that may cause undesired operation.

The super domes have been tested and found to comply with the limits for Class A digital device, pursuant to Part 15 of the FCC rules. These limits are designed to provide reasonable protection against harmful interference when the equipment is operated in a residential environment. This equipment generates, uses, and can radiate radio frequency energy and, if not installed and used in accordance with the instructions, may cause harmful interference to radio communications. However, there is no guarantee that interference will not occur in a particular installation.

Read this manual carefully before installation. This manual should be saved for future use.

Important Safety Instructions and Warnings

- Electronic devices must be kept away from water, fire or high magnetic radiation.
- Clean with a dry cloth.
- Provide adequate ventilation.
- Unplug the power supply when the device is not to be used for an extended period of time.
- Only use components and parts recommended by manufacturer.
- Position power source and related wires to assure they will be kept away from ground and access way.
- Refer all service matters to qualified personnel.
- Save product packaging to ensure availability of proper shipping containers for future transportation.
- The power should be subject to below conditions (except for ceiling mounting and pendant mounting) when 24VAC or 12VDC is adopted:
  Technical data: Rated output 24VAC, min. 2.3A, marked "LPS" or "Class 2"
  Rated output 12VDC, min. 2.5A, marked "LPS" or "Class 2"
  Product Category CCN(s) : QQGQ or EPBU
  Required Marks of Conformity: UL＋cUL

Indicates that the un-insulated components within the product may carry a voltage harmful to humans.

Indicates operations that should be conducted in strict compliance with instructions and guidelines contained in this manual.

Warning: To avoid risk of fire and electric shock, keep the product away from rain and moisture!

Table of Contents

Chapter I Precautions 1
1.1 Be careful during transportation 1
1.2 Plan your installation beforehand 1
1.3 Pay extra care during installation..... 1
1.4 Take necessary cautions for electrical safety 1
1.5 Ensure proper operation and maintenance..... 1
Chapter II Requirements and Connections..... 2
2.1 Environmental Requirements 2
2.2 Wiring requirements 2
2.2.1 Standard Dome Cable Connection 2
2.2.2 Twisted Pair Dome Cable Connection..... 2
2.2.3 IP Dome Cable Connection 3
2.2.4 Lightningproof Grounding..... 4
Chapter III Mounting..... 5
3.1 Ceiling Mounting 5
3.1.1 Indoor Mounting Specifications..... 5
3.1.2 Outdoor Mounting Specifications 5
3.1.3 Installation Procedures For In-ceiling Mounting..... 5
3.2 Over-roof Mounting 6
3.2.1 Over-roof Mounting Specifications..... 6
3.2.2 Installation Procedures For Over-roof Mounting 7
3.3 Wall Mounting 8
3.3.1 Specifications For Short-Arm Wall mounting 8
3.3.2 Specifications For Long-Arm Wall Mounting 9
3.3.3 Installation Procedures For Wall Mounting..... 9
3.4 Corner Mounting..... 10
3.4.1 Indoor Mounting Specifications..... 10
3.4.2 Outdoor Mounting Specifications 10
3.4.3 Installation Procedures For Corner Mounting..... 10
3.5 Pole Mounting 12
3.5.1 Indoor Mounting Specifications..... 12
3.5.2 Outdoor Mounting Specifications 12
3.5.3 Installation Procedures For Pole Mounting 12
3.6 Pendant Mounting..... 13
3.6.1 Indoor Mounting Specifications..... 13
3.6.2 Outdoor Mounting Specifications 14
3.6.3 Installation Procedures For Pendant Mounting 14
Chapter IV Assembly and Disassembly Procedures..... 16
Appendix I Setting Camera ID 16
Appendix II Setting Communication Baud Rate and Protocol 19
Appendix III Usage of Dustproof Sponge 19
Appendix IV Usage of Waterproof Tape 20

Chapter I Precautions

The super domes have been designed and manufactured to ensure maximum reliability for various applications. However, the actual performance may also depend on how you plan and make the installation. Before attempting to install or operate the super domes, therefore, please thoroughly familiarize yourself with the following instructions, and make sure that they are strictly followed.

1.1 Be careful during transportation

To avoid damage, protect the units against extremes of pressure, shock or vibration during transportation. The products must be shipped in parts disassembled as the original packing did, and kept away from water, fire and high magnetic radiation. In no event will Infinova be liable for any damage or loss arising from improper transportation or storage.

1.2 Plan your installation beforehand

- Do not install an indoor dome in outdoor environment.
- Keep the domes away from electric or magnetic fields. Devices such as TV, audio speaker, high-capacity transformer, electric motor and radio transmitter usually generate magnetic fields that may distort the camera images.
- Protect the domes from dampness and dust. Do not install the domes where the humidity is over 90%, or where there is greasy smoke, steam, or too much dust.
- Avoid installations in a hostile environment. The domes are designed to work at a temperature ranging from 0°C to +40°C (indoor) or -40℃ to +50℃ (outdoor).

1.3 Pay extra care during installation

- Handle the unit carefully, and do not drop or subject it to strong shock or vibration.
- Always use proper safety equipment for the location and installation.
- Make sure that the materials are capable of supporting four times the maximum specified load.
- The unit contains electrostatic-sensitive components. Be careful not to touch any exposed circuits directly when connecting wires and assembling the domes. It is recommended to use proper static-proof equipment when handling the PCB.
- Make sure that the domes are powered off when connecting wires to avoid accident during installation.
- Do not directly touch the lower dome bubble. The dome bubble is a precision component, and any scratch could result in a degradation of image quality.
- Make sure that no metal objects or flammable substance accidentally get inside the domes to avoid damage caused by short circuit or fire.

1.4 Take necessary cautions for electrical safety

- Always conform to local electrical safety codes when installing or operating the domes.
- When powering the domes and the auxiliary devices connected, check that the power supply specifications correspond to those required.
- Keep the domes and communication cables at least 165 ft. (50 m) away from high voltage equipment or cables. If a particular installation requires closer wiring, shield the communication wires with steel tube, and make it properly grounded.
- In certain circumstances, the following measures are necessary for electrical safety:
  - When making outdoor installation, route cables under eaves whenever possible.
  - Do not use trolley wire in open area. Instead, place cables in steel tubes that are properly shielded underground.
  - Be sure to install extra strong lightning proof equipment where strong thunderstorms are frequent or where there is a high faradic facility (e.g., a high voltage transformer substation) nearby.

1.5 Ensure proper operation and maintenance

- Protect the domes from excessive light. Do not point the domes directly at such extremely bright light sources as the sun. Otherwise, the CCD might be permanently damaged.
- Do not dissemble the dome drive module. There are no user serviceable parts inside the module, and failure to observe this instruction will cause loss of warranty. For internal settings and repairs, please refer to authorized personnel only.
- The dome bubble should be cleaned periodically to get clear and crisp images. Clean the dome bubble with a soft cloth, and be careful to hold its edge only. Do not directly touch the dome bubble. Any finger marks or scratches on the cover might cause vague or distorted images.
- Do not use chemical products like benzine or thinner. If neutral cleanser is required, make sure to read all accompanying instructions to determine that no negative effect will be caused.
- Prevent any plastic or rubber material from staying in contact with the cabinet for a long period of time. Otherwise, it might cause paint peeling or damages.

Chapter II Requirements and Connections

Please refer to the following instructions when preparing for your installation.

2.1 Environmental Requirements

Check the operating environment and power requirements for your installation. To assure that your dome cameras will work safely and properly, place each hardware component in a suitable operating environment with an appropriate power source.

	Indoor Domes	Outdoor Domes
Maximum temperature	0 ~ +40℃	-40 ~ +50℃
Humidity	< 90%	< 90%
Air Pressure	86 ~ 106 KPa	86 ~ 106 KPa
AC Power	24VAC, 1.5A, 50/60Hz	24VAC, 2.5A, 50/60Hz
DC Power (Optional)	12VDC, 1.8A	12VDC, 2.5A

2.2 Wiring requirements

The type of the cables used in your system might affect the transmission quality as well as maximum operating distance. Please select an appropriate cable type that best suits your application.

2.2.1 Standard Dome Cable Connection

The video coaxial cable is selected for video line, and the Shielded Twisted Pair (STP) is selected for control line.

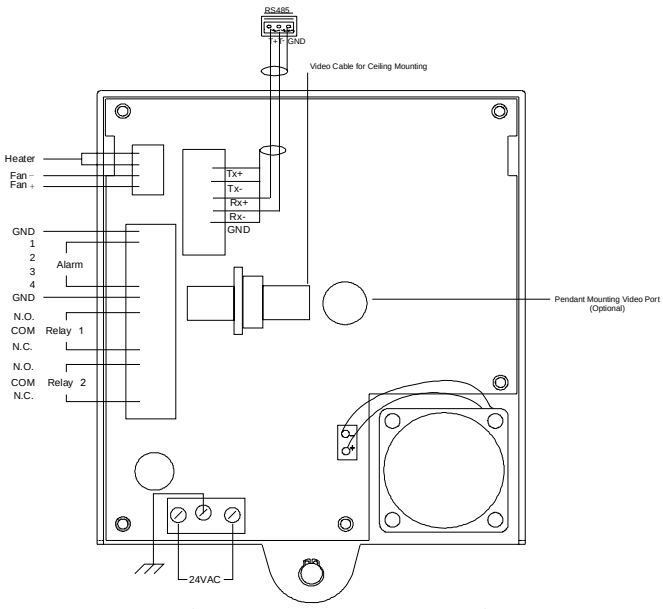

Figure2-1. 24VAC Power Board

12VDC power supply is optional with different power connection. Please declare before ordering. Refer to below figure for detailed information on 12VDC power connection.

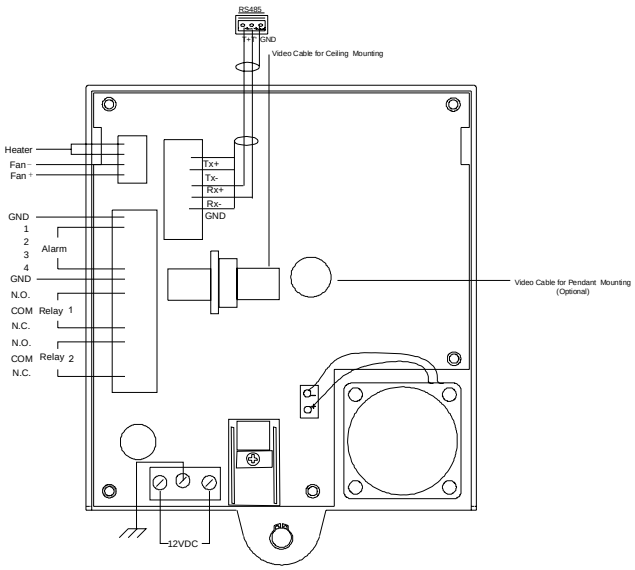

Figure2-2. Uniform 12VDC Power Board (Version C)

Video Coaxial Cable

To select video coaxial cable, please ensure the following minimum requirements:

1. 75 ohm impedance;
2. All-copper center conductor;
3. 95% braided copper shield.

For maximum operating distance, please refer to the following table.

Coaxial Cable Type	Maximum Operating Distance
RG59/U	750 ft (229 m)
RG6/U	1000 ft (305 m)

Control Signal Cable

Use 18 AWG, shielded, 2-wire cable, Belden 8760 or equivalent (for plenum, Belden 8760). The maximum control distance is about 4000 ft. The control signal cables normally include RS485 control cable. RS-485 control cable should be selected for PELCO P/D and INFINOVA protocols.

For video coaxial control domes, only the coaxial cable should be connected since video signal and control signal are both transmitted via the same video cable.

Note: Two control cables with termination of R+ and R- should be connected for RS485 protocols.

2.2.2 Twisted Pair Dome Cable Connection

Use one non-shielded twisted pair cable for dome connection. The twisted pair uses 2 pins, connected to a terminal. One end of the twisted pair is connected with the port placed onto the twisted pair transmiting module embedded in the dome and the other end is connected to the twisted receiver provided by Infinova. The twisted pair transmitting module is fixed onto the version B power board and the connectors are shown as below:

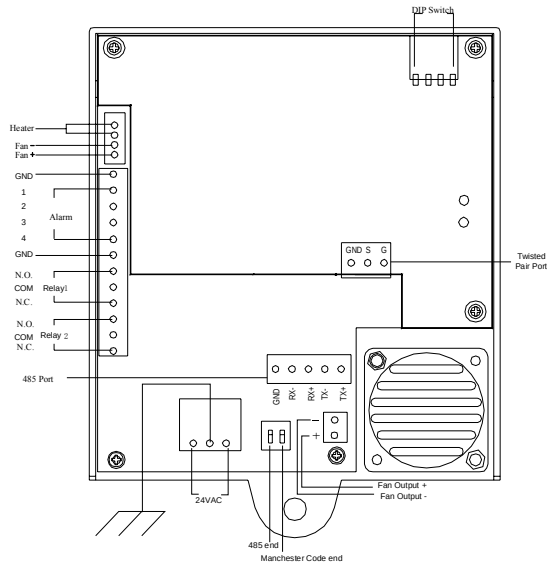

Figure 2-3 24VAC Power Board

Configure DIP switch on transmitting module and receiver simply according to distance to have best video signal transmission. Refer to the instructions below of DIP switch setup on transmitting module:

ON: Press DIP switch; **OFF:** Raise DIP switch.

Distance	DIP Switch			
	1	2	3	4
0-600 m	OFF	OFF	OFF	ON
600-900 m	OFF	OFF	ON	OFF
900-1200 m	OFF	ON	OFF	OFF
>1200 m	ON	OFF	OFF	OFF

Note:

1. Configure DIP switch according to effect of real distance to have best image as twisted pair offered by different manufacturer is different
2. Configure DIP switch of transmit module, and then the receiver.
3. Receiver DIP switch setup is different from that of transmitting module, please refer to the corresponding manuals and make sure the instructions are strictly followed.

Typical diagram is shown as below:

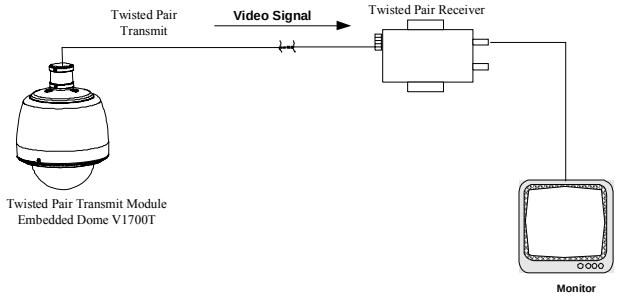

Figure 2-4

2.2.3 IP Dome Cable Connection

For the video signal and control signal are both transmitted via the network, the IP dome connection with the network is easily attained through RJ45 interface.

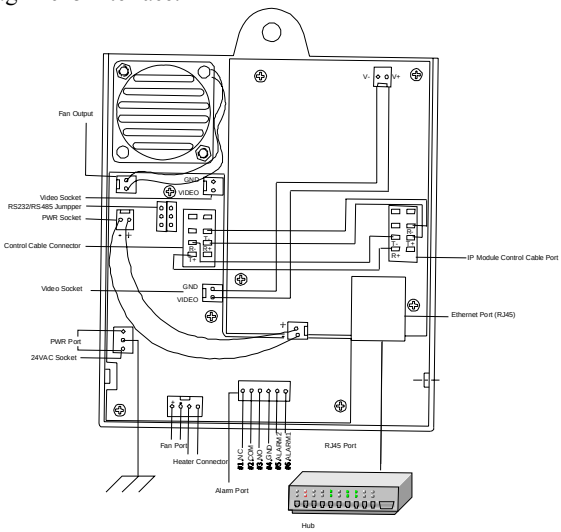

Figure2-5 V1700N-C Series 24VAC IP Dome (Version E)

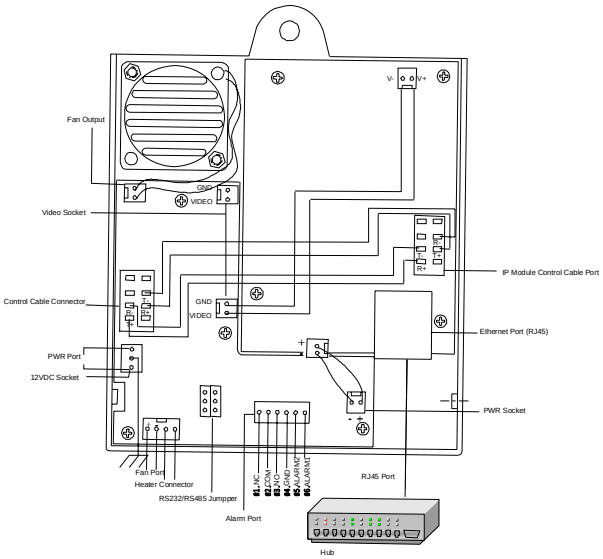

Figure2-6 V1700N-C Series 12VDC IP Dome (Version B)

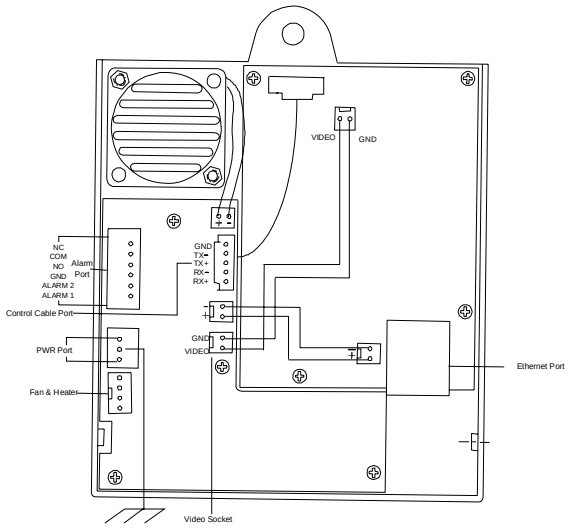

Figure2-7 V1700N-S Series 24VAC IP Dome (Version H)

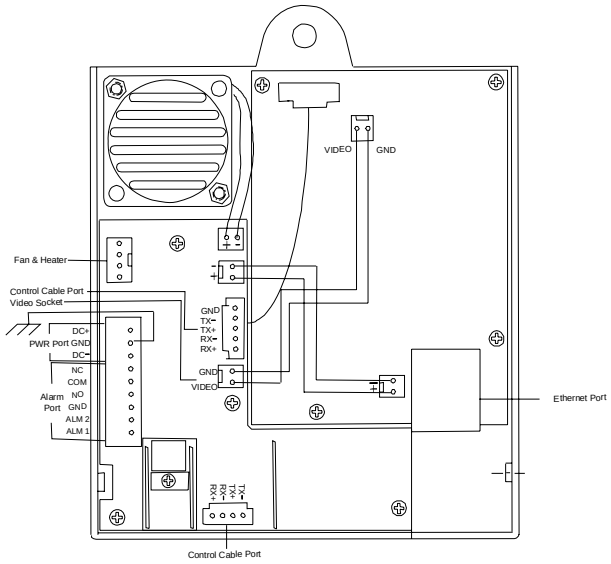

Figure2-8 V1700N-S Series 12VDC IP Dome (Version B)

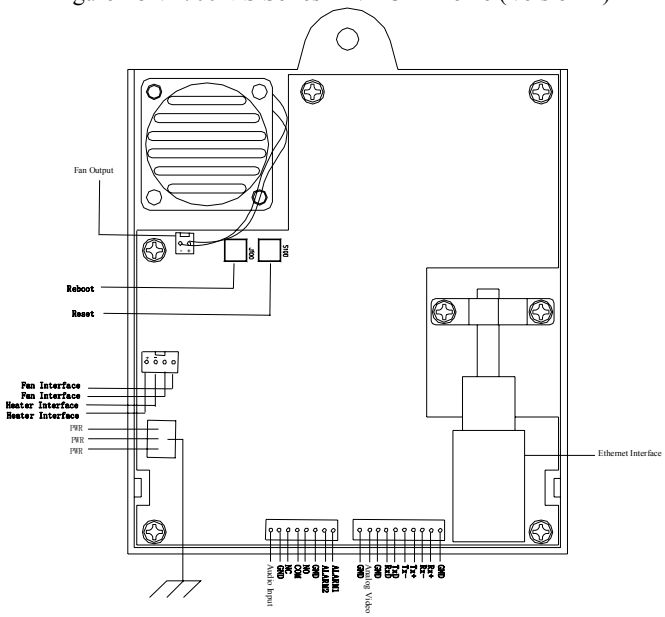

Figure2-9 V1700N-L Series 12VDC/24VAC IP Dome (Version H)

Note:

1. The button marked as S100 in Fig 2-9 can restore the factory default. Hold it for 10 seconds. Then you can press the reboot button to reboot the dome.
2. The IP address will go back to factory default as 192.168.1.100 (for V1700N-L series only).

2.2.4 Lightningproof Grounding

To better protect the domes against damages by lightning surge (≤ ± 2KV), please pay attention to the following notes before attempting to install the domes:

1. The system should be equipotential grounding. Connect the middle pin of the 3-pin power terminal on the power panel to the earth, the grounding impedance is supposed to be not larger than 4Ω, and the sector area of grounding wire should not be larger than 25 mm^2 .
2. The lightning protection and grounding for outdoor devices and wires should be designed in line with the lightning protection requirements of buildings, state standards and industry standards.
3. In thunderstorm area or high inductive voltage area such as high-voltage station, extra-high power lightningproof devices and lightning rod should be installed.

Chapter III Mounting

This installation manual suits for all Infinova super domes including IP dome, analogue dome, video coaxial dome and twisted pair dome. To make it convenient, this chapter describes the installation of standard super dome as the example.

3.1 Ceiling Mounting

3.1.1 Indoor Mounting Specifications

Below figures demonstrate the installation specifications for ceiling mounting (Unit: mm).

Indoor Ceiling Mounting:

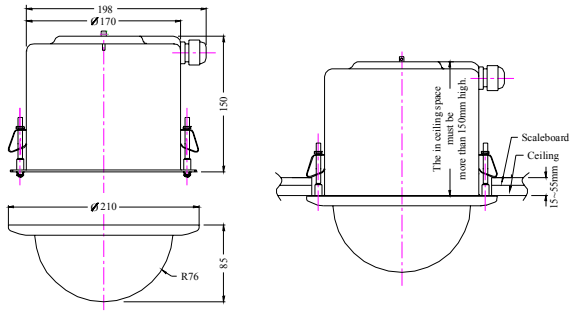

3.1.2 Outdoor Mounting Specifications

Outdoor Ceiling Mount:

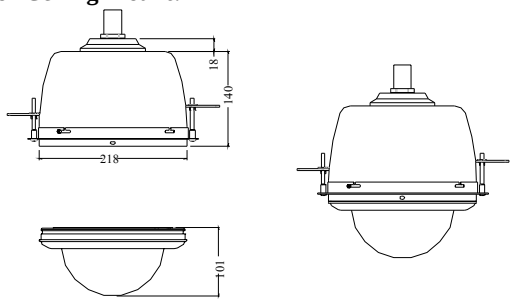

3.1.3 Installation Procedures For In-ceiling Mounting

Easily install your super dome in below steps:

1. Locate the center point of a suitable mounting location, and draw a circle with 199±3(indoor) or 246±3 (outdoor) mm in diameter on the ceiling. (It is necessary to add a mounting plate to the ceiling, so that the dome can be mounted steadily to the ceiling.)

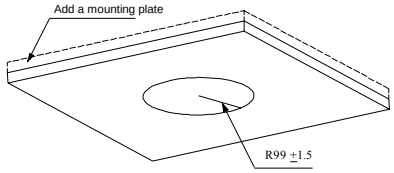

Indoor

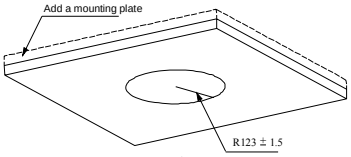

Outdoor

Figure 3-1. Drawing a circle on the ceiling

2. Use a cutting tool suitable for the material of the ceiling, and cut the circle out of the ceiling.

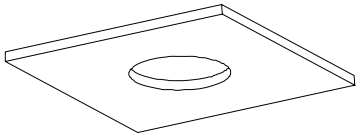

Figure 3-2. Cutting the Circle out of the Ceiling

3. Take out the upper housing from the dome package. Loosen the bolt that holds the connection circuit board, and lift the board for wiring connection.

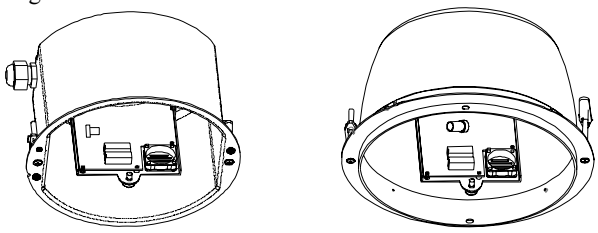

Indoor Mounting Outdoor Mounting

Figure 3-3. Preparing the housing

4. For indoor mounting: take off the two flexible buckles from upper housing and then pull the upper housing through the circle in the ceiling. After that, put the flexible buckles onto the screw rod and secure the screw rod until the housing is fixed to the ceiling tightly; For outdoor mounting: Locate the upper housing into the circle on the ceiling and make it locked tightly. Fasten two M5X60mm daisy-groove screw on the bottom edge of upper housing to fix upper housing on the ceiling.

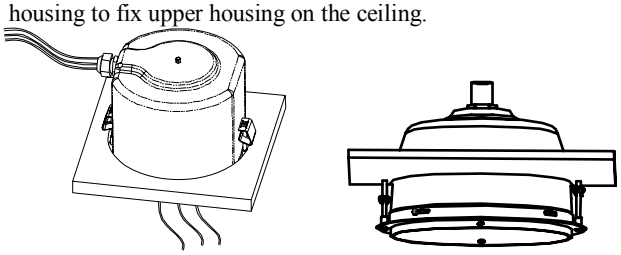

Indoor Mounting Outdoor Mounting

Figure 3-4. Installing Housing

5. Connect system cables (power, communication and video) to the connection circuit board inside the housing. For outdoor dome, make sure that the heater and fan are also properly connected. Then, push the board back to its original position, and tighten the holding screw to close the opening.

6. Take out the dome drive from the dome package. Set the camera ID by configuring the DIP switch S1. Set the communication baud rate and protocol by configuring the DIP switch S2. For details on how to configure the DIP switch, please refer to **Appendix I and II.**

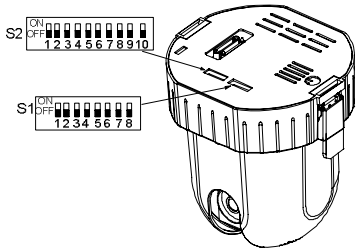

Figure 3-5. DIP Switch S1, S2

7. Line up the two tabs located on the upper side of the dome drive with the corresponding grooves in the housing. Insert both tabs into the grooves. Push up the dome insert until both tabs click into place. Be sure that you hear two clicks.

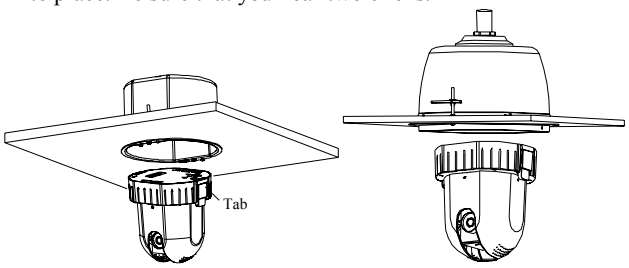

Indoor Mounting Outdoor Mounting

Figure 3-6. Installing Dome Drive

8. For indoor mounting: take out the dome bubble from the dome package and fix the safety cord. As one end of safety cord has already fixed to the dome bubble, and the other end should be tied to the upper housing. Line the lock mark on the dome bubble pastern ringer up with the screw on the dome drive. Then facing the dome drive, turn the dome bubble clockwise to fit it firmly with the black cover. For outdoor mounting: take out the dome bubble from the dome package and fix the safety cord. As one end of safety cord has already fixed to the upper housing, and the other end should be tied to the dome bubble. At the same time, connect cable terminal of temperature control switch in the housing with that of heater in the dome bubble. Position the junction in the spacing between heater gasket and outer space of the dome bubble. At last, line up the screw holes of the dome bubble with corresponding holes on the housing, and then secure the cover with supplied screws, shown as Figure 3-7.

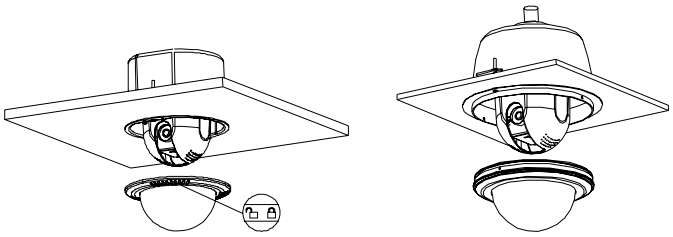

Indoor Mounting Outdoor Mounting

Figure 3-7. Installing Dome Bubble

9. Turn on the power. The dome will pan, tilt, and zoom to initiate system parameters as well as to verify the normal operation of the dome drive.

After the initiation sequence, the dome will stop and be ready for programming and operation.

3.2 Over-roof Mounting

3.2.1 Over-roof Mounting Specifications

The over-roof mounting includes plane installation and sidewall installation. Below figure demonstrates the dome and brackets specifications (Unit: mm):

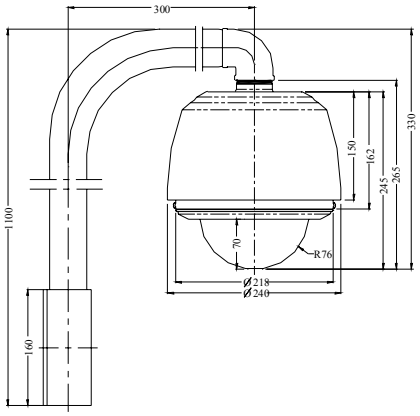

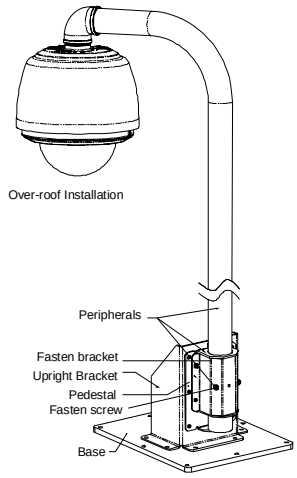

Over-roof horizontal surface Mounting

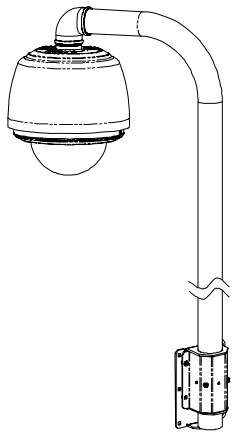

Over-roof sidewall Mounting

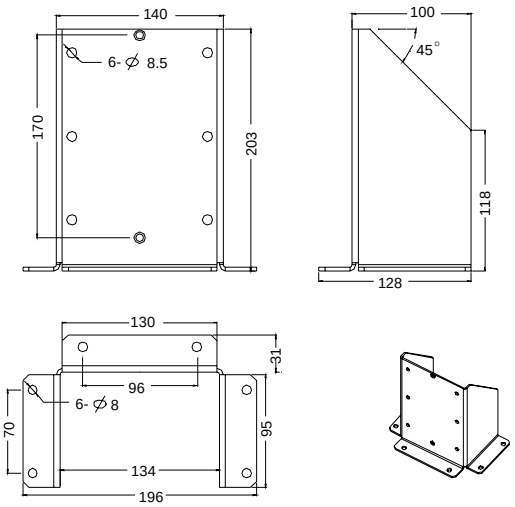

Upright Bracket Dimensions

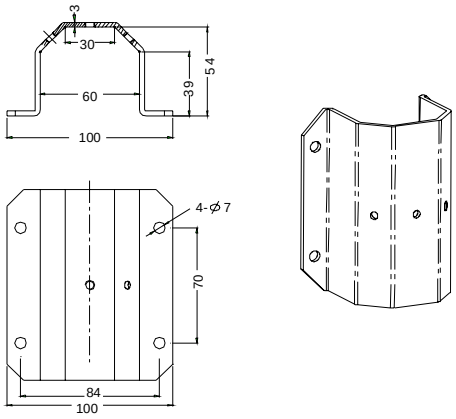

Fastening Bracket dimensions

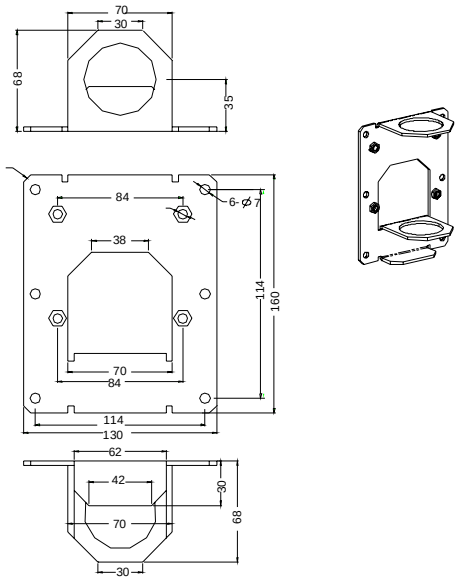

Pedestal Bracket Dimensions

3.2.2 Installation Procedures For Over-roof Mounting

Note: When installing the dome (bracket mount), as to the usage of dustproof sponge and waterproof tape, please refer to **Appendix III** and **Appendix IV** separately.

Easily install your super dome in below 8 steps:

1. Place and secure the bracket base at a suitable position against the wall. Pull the wiring through the bracket and the sustaining pipe.

For over-roof plane installation, the base, upright bracket, pedestal bracket and fastening bracket should be secured with the sustaining pipe together.

For over-roof sidewall installation, only the pedestal bracket and fastening bracket should be secured with the sustaining pipe. Refer to sector 3.2.1 for the brackets' detailed information.

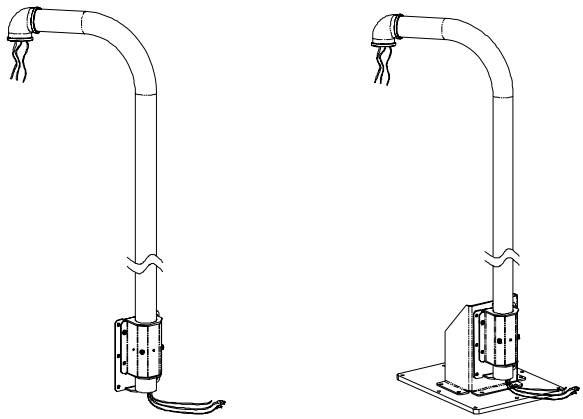

Sidewall Mounting Horizontal surface Mounting

Figure 3-8. Install Bracket Base

2. Take out the upper housing from the dome package. Loosen the bolt that holds the connection circuit board, and lift the board for wiring connection.

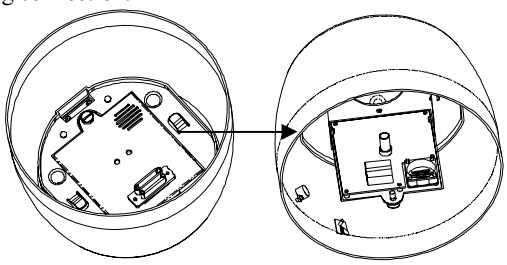

Figure 3-9. Lifting Connection Board

3. Pull the cables through the opening, and then screw the upper housing onto the mount bracket. For outdoor housing, it is recommended to apply thread compound to the threads on the housing. Secure the connection with a holding screw.

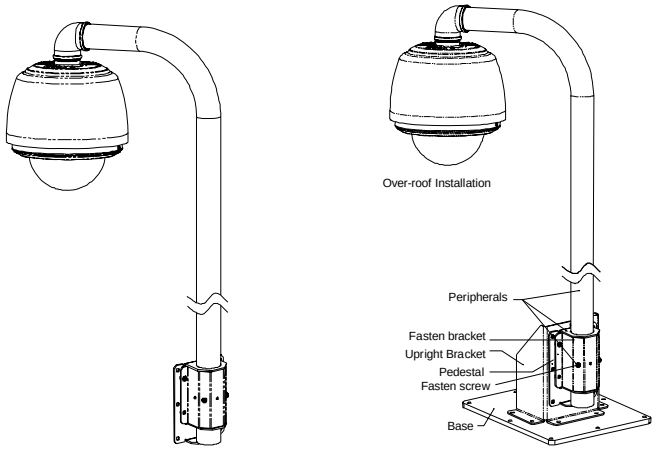

Sidewall Mounting Horizontal surface Mounting

Figure 3-10. Installing Housing

4. Connect system cables (power, communication and video) to the connection circuit board inside the housing. For outdoor dome, make sure that the heater and fan are also properly connected. Then, push the board back to its original position, and tighten the holding screw to close the opening.

5. Take out the dome drive from the dome package. Set the camera ID by configuring the DIP switch S1. Set the communication baud rate and protocol by configuring the DIP switch S2. For detail on how to configure the DIP switch, please refer to **Appendix I** and **II.**

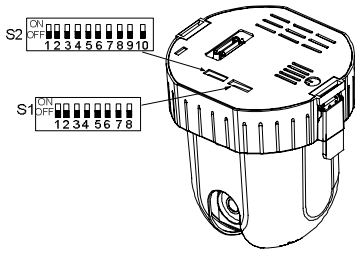

Figure 3-11. DIP Switch S1, S2

6. Line up the two tabs located on the upper side of the dome drive with the corresponding grooves in the housing. Insert both tabs into the grooves. Push up the dome insert until both tabs click into place. Be sure that you hear two clicks.

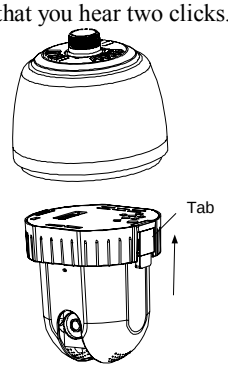

Figure 3-12. Installing Dome Drive

7. Take out the dome bubble from the dome package and fix the safety cord. As one end of safety cord has already fixed to the upper housing, and the other end should be tied to the dome bubble. At the same time, connect cable terminal of temperature control switch in the housing with that of heater in the dome bubble. Position the junction in the spacing between heater gasket and outer space of the dome bubble. At last, locate dome bubble onto upper housing in correct direction and line up the screw holes of the dome bubble with corresponding holes on the housing, and then secure the cover with supplied screws.

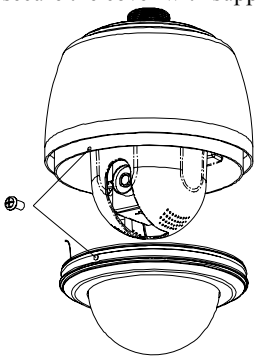

Figure 3-13. Installing Dome Bubble

8. Turn on the power. The dome will pan, tilt, and zoom to initiate system parameters as well as to verify the normal operation of the dome drive.

After the initiation sequence, the dome will stop and be ready for programming and operation.

3.3 Wall Mounting

3.3.1 Specifications For Short-Arm Wall mounting

Below figures demonstrate the installation specifications for short-arm wall mounting (Unit: mm).

Indoor Mounting:

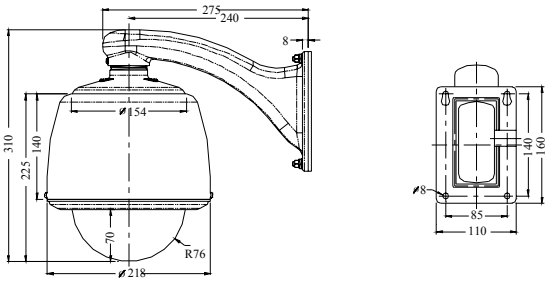

Outdoor Mounting:

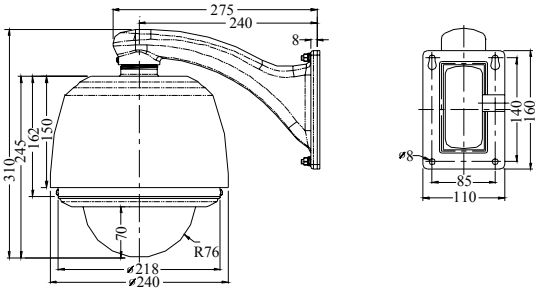

3.3.2 Specifications For Long-Arm Wall Mounting

Below figures demonstrate the installation specifications for long-arm wall mounting (Unit: mm).

Indoor Mounting:

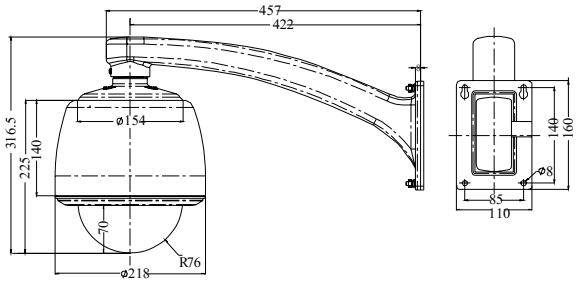

Outdoor Mounting:

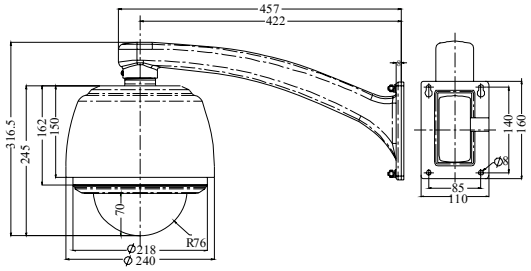

3.3.3 Installation Procedures For Wall Mounting

Note: When installing the dome (bracket mount), as to the usage of dustproof sponge and waterproof tape, please refer to **Appendix III** and **Appendix IV** separately.

Easily install your super dome in below 8 steps:

1. Install the wall mount at a suitable location, and pull the power, communication and video cables through the mount.

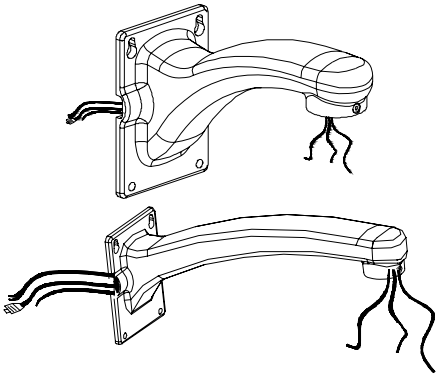

Figure 3-14. Installing Wall Mount

For dimensional diagram of the mount, please refer to the following figure (Unit: mm).

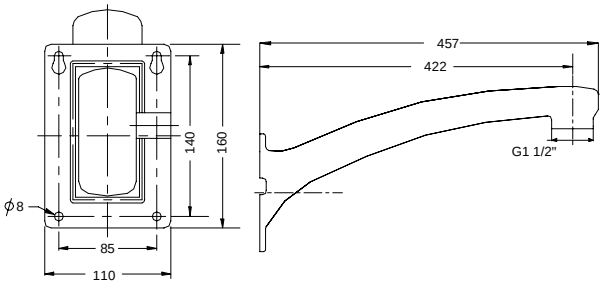

Long-Arm Wall Mount

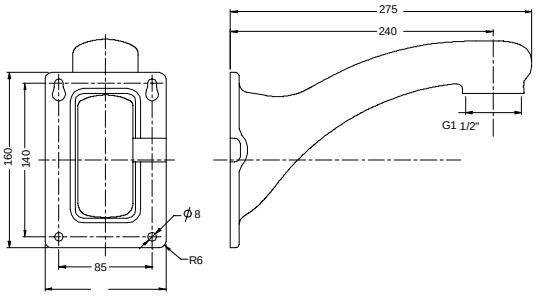

Short-Arm Wall Mount

Figure 3-15. Dimensional Diagram for Wall Mount

2. Take out the upper housing from the dome package. Loosen the bolt that holds the connection circuit board, and lift the board for wiring connection.

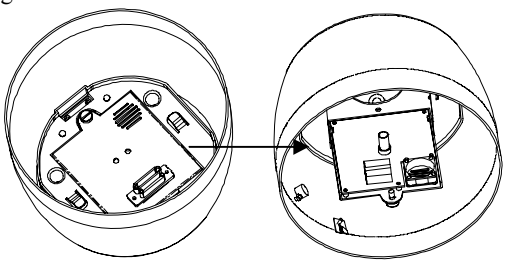

Figure 3-16. Lifting Connection Board

3. Pull the cables through the opening, and then screw the upper housing onto the wall mount. For outdoor housing, it is recommended to apply thread compound to the threads on the housing. Secure the connection with a holding screw.

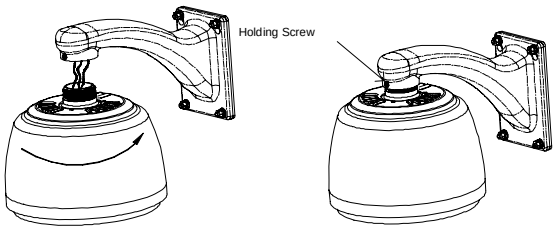

Outdoor Mounting

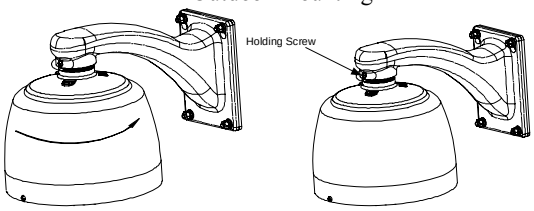

Indoor Mounting

Figure 3-17. Installing Housing

4. Connect system cables (power, communication and video) to the connection circuit board inside the housing. For outdoor dome, make sure that the heater and fan are also properly connected. Then, push the board back to its original position, and tighten the holding screw to close the opening.

5. Take out the dome drive from the dome package. Set the camera ID by configuring the DIP switch S1. Set the communication baud rate and protocol by configuring the DIP switch S2. For detail on how to configure the DIP switch, please refer to **Appendix I** and **II.**

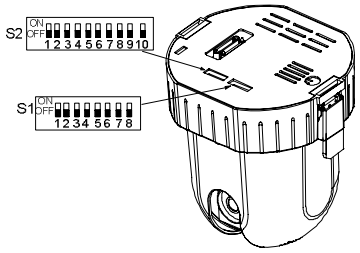

Figure 3-18. DIP Switch S1, S2

6. Line up the two tabs located on the upper side of the dome drive with the corresponding grooves in the housing. Insert both tabs into the grooves. Push up the dome insert until both tabs click into place. Be sure that you hear two clicks.

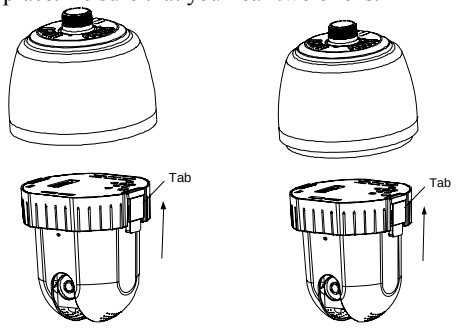

Indoor mounting Outdoor mounting

Figure 3-19. Installing Dome Drive

7. Take out the dome bubble from the dome package and fix the safety cord. As one end of safety cord has already fixed to the upper housing, and the other end should be tied to the dome bubble. (For outdoor domes, at the same time, connect cable terminal of temperature control switch in the housing with that of heater in the dome bubble. Position the junction in the spacing between heater gasket and outer space of the dome bubble). At last, locate dome bubble onto upper housing in correct direction and line up the screw holes of the dome bubble with corresponding holes on the housing, and then secure the cover with supplied screws.

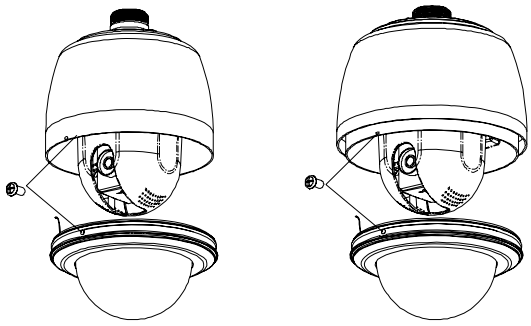

Indoor Mounting Outdoor Mounting

Figure 3-20. Installing Dome Bubble

8. Turn on the power. The dome will pan, tilt, and zoom to initiate system parameters as well as to verify the normal operation of the dome drive.

After the initiation sequence, the dome will stop and be ready for programming and operation.

3.4 Corner Mounting

3.4.1 Indoor Mounting Specifications

Below figures show the corner mounting specifications (Unit: mm):

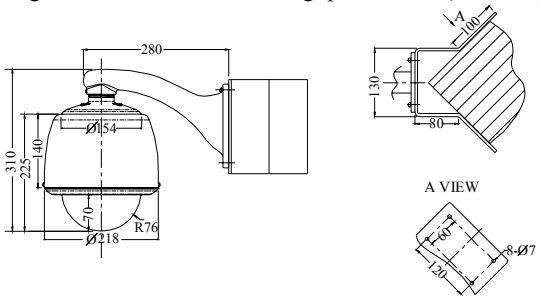

3.4.2 Outdoor Mounting Specifications

Below figures show the corner mounting specifications (Unit: mm):

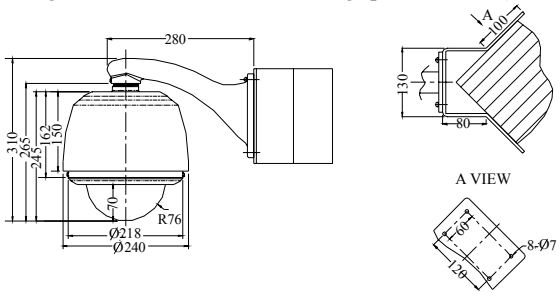

3.4.3 Installation Procedures For Corner Mounting

Note: When installing the dome (bracket mount), as to the usage of dustproof sponge and waterproof tape, please refer to **Appendix III** and **Appendix IV** separately.

Easily install your super dome in below 9 steps:

1. Place the bracket base at a suitable position against the corner, and secure it with eight expansion bolts. Pull the wiring through the bracket hole. For dimensional diagram of the bracket base,

please refer to the following figure (Unit: mm).

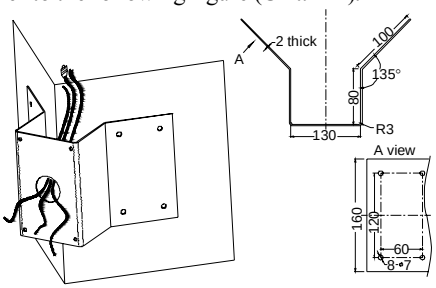

Figure 3-21. Installing Bracket Base

2. Use the four screws supplied with the mount bracket to secure the bracket onto the base. Pull the wiring through the mount bracket.

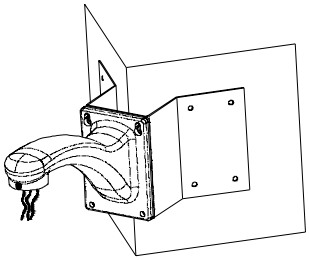

Figure 3-22. Installing Mount Bracket

3. Take out the upper housing from the dome package. Loosen the bolt that holds the connection circuit board, and lift the board for wiring connection.

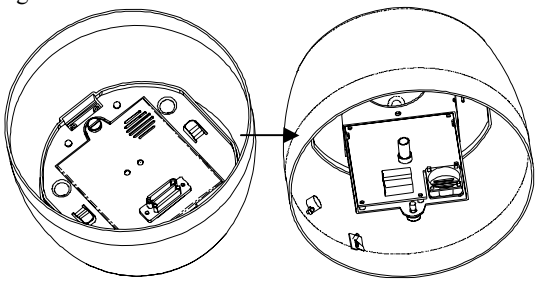

Figure 3-23. Lifting Connection Board

4. Pull the cables through the opening, and then screw the upper housing onto the mount bracket. For outdoor housing, it is recommended to apply thread compound to the threads on the housing. Secure the connection with a holding screw.

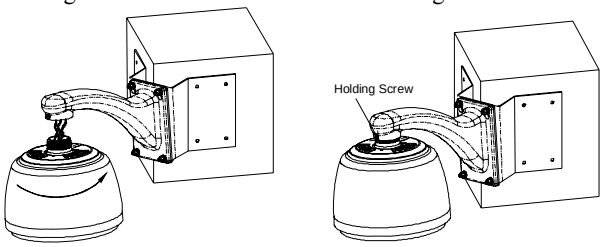

Outdoor Mounting

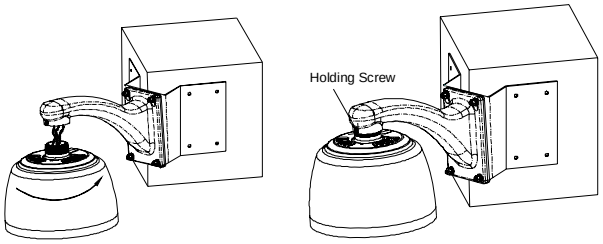

Indoor Mounting

Figure 3-24. Installing Housing

5. Connect system cables (power, communication and video) to the connection circuit board inside the housing. For outdoor dome, make sure that the heater and fan are also properly connected. Then, push the board back to its original position, and tighten the holding screw to close the opening.

6. Take out the dome drive from the dome package. Set the camera ID by configuring the DIP switch S1. Set the communication baud rate and protocol by configuring the DIP switch S2. For detail on how to configure the DIP switch, please refer to **Appendix I** and **II.**

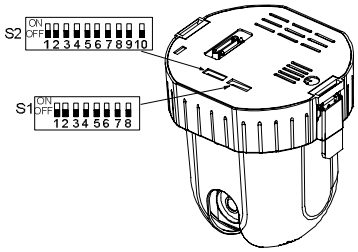

Figure 3-25. DIP Switch S1, S2

7. Line up the two tabs located on the upper side of the dome drive with the corresponding grooves in the housing. Insert both tabs into the grooves. Push up the dome insert until both tabs click into place. Be sure that you hear two clicks.

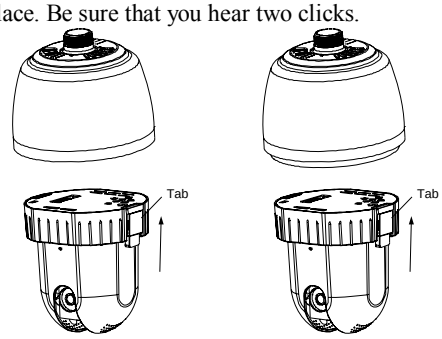

Indoor mounting Outdoor mounting

Figure 3-26. Installing Dome Drive

8. Take out the dome bubble from the dome package and fix the safety cord. As one end of safety cord has already fixed to the upper housing, and the other end should be tied to the dome bubble. (For outdoor domes, at the same time, connect cable terminal of temperature control switch in the housing with that of heater in the dome bubble. Position the junction in the spacing between heater gasket and outer space of the dome bubble). At last, locate dome bubble onto upper housing in correct direction and line up the screw holes of the dome bubble with corresponding holes on the housing, and then secure the cover

with supplied screws.

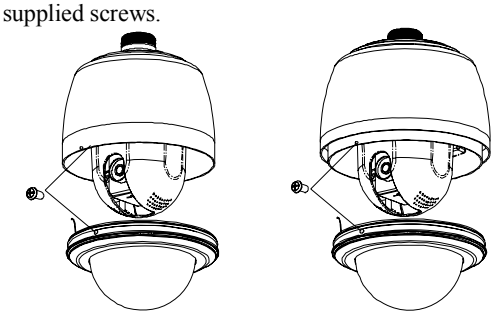

Indoor mounting Outdoor mounting

Figure 3-27. Installing Dome Bubble

9. Turn on the power. The dome will pan, tilt, and zoom to initiate system parameters as well as to verify the normal operation of the dome drive.

After the initiation sequence, the dome will stop and be ready for programming and operation.

3.5 Pole Mounting

3.5.1 Indoor Mounting Specifications

Below figures show the Pole mounting specifications (Unit: mm):

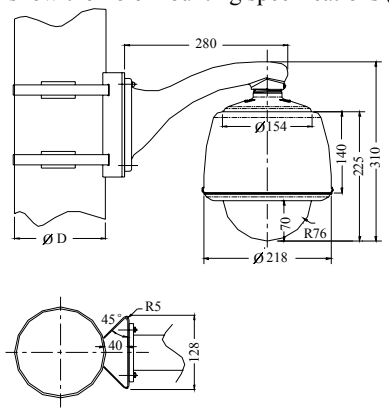

3.5.2 Outdoor Mounting Specifications

Below figures show the Pole mounting specifications (Unit: mm):

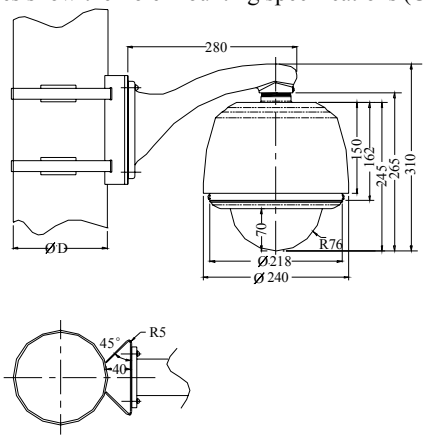

3.5.3 Installation Procedures For Pole Mounting

Note: When installing the dome (bracket mount), as to the usage of dustproof sponge and waterproof tape, please refer to **Appendix III** and **Appendix IV** separately.

Easily install your super dome in below 9 steps:

1. Place the bracket base at a suitable position against the pole, and secure it to the pole with two clamps. Pull the wiring through the bracket hole.

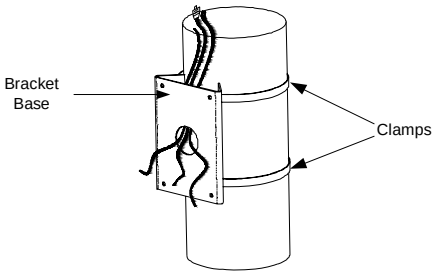

Figure 3-28. Installing Bracket Base

2. Use the four screws supplied with the mount bracket to secure the bracket onto the base. Pull the wiring through the mount bracket.

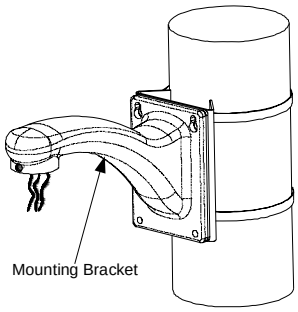

Figure 3-29. Installing Mount Bracket

3. Take out the upper housing from the dome package. Loosen the bolt that holds the connection circuit board, and lift the board for wiring connection.

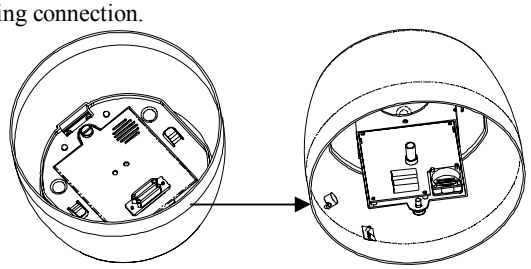

Figure 3-30. Lifting Connection Board

4. Pull the cables through the opening, and then screw the upper housing onto the mount bracket. For outdoor housing, it is recommended to apply thread compound to the threads on the housing. Secure the connection with a holding screw.

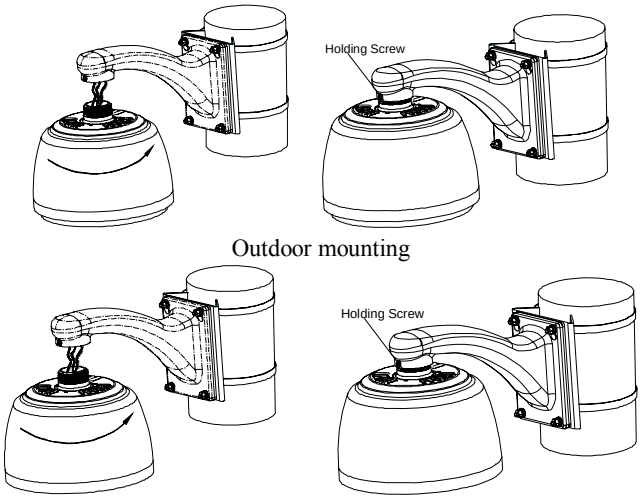

Outdoor mounting

Indoor mounting

Figure 3-31. Installing Housing

5. Connect system cables (power, communication and video) to the connection circuit board inside the housing. For outdoor dome, make sure that the heater and fan are also properly connected. Then, push the board back to its original position, and tighten the holding screw to close the opening.

6. Take out the dome drive from the dome package. Set the camera ID by configuring the DIP switch S1. Set the communication baud rate and protocol by configuring the DIP switch S2. For detail on how to configure the DIP switch, please refer to **Appendix I** and **II.**

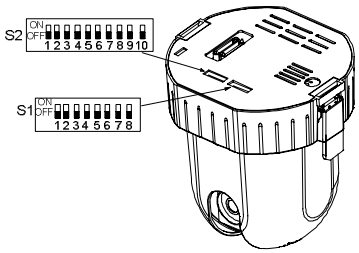

Figure 3-32. DIP Switch S1, S2

7. Line up the two tabs located on the upper side of the dome drive with the corresponding grooves in the housing. Insert both tabs into the grooves. Push up the dome insert until both tabs click into place. Be sure that you hear two clicks.

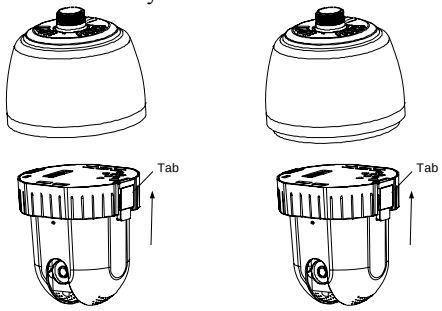

Indoor mounting Outdoor mounting

Figure 3-33. Installing Dome Drive

8. Take out the dome bubble from the dome package and fix the safety cord. As one end of safety cord has already fixed to the upper housing, and the other end should be tied to the dome bubble. (For outdoor domes, at the same time, connect cable terminal of temperature control switch in the housing with that of heater in the dome bubble. Position the junction in the spacing between heater gasket and outer space of the dome bubble). At last, locate dome bubble onto upper housing in correct direction and line up the screw holes of the dome bubble with corresponding holes on the housing, and then secure the cover with supplied screws.

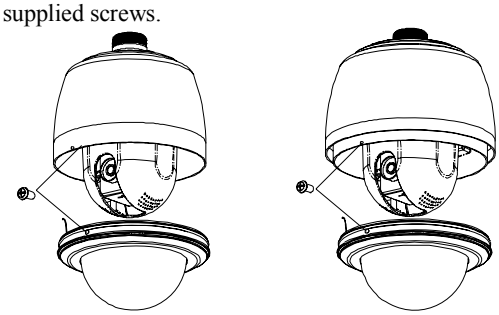

Indoor mounting Outdoor mounting

Figure 3-34. Installing Dome Bubble

9. Turn on the power. The dome will pan, tilt, and zoom to initiate system parameters as well as to verify the normal operation of the dome drives.

After the initiation sequence, the dome will stop and be ready for programming and operation.

3.6 Pendant Mounting

3.6.1 Indoor Mounting Specifications

Below figures show the Pendant mounting specifications (Unit: mm):

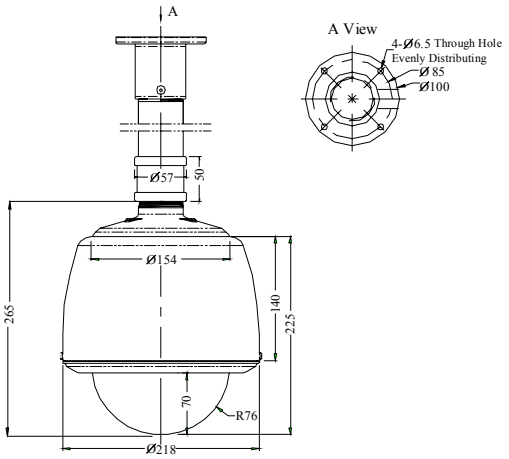

3.6.2 Outdoor Mounting Specifications

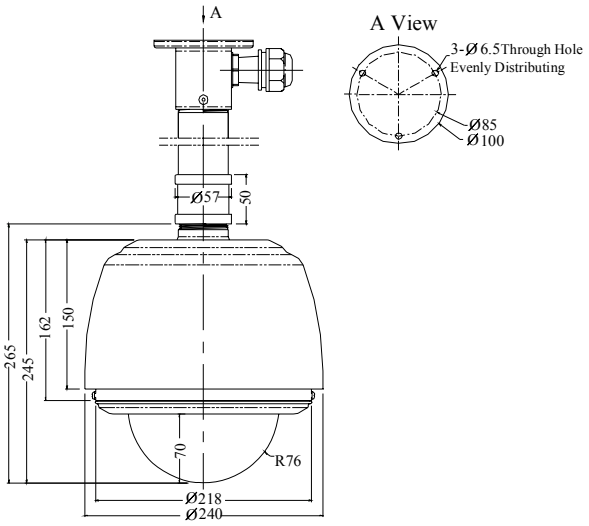

3.6.3 Installation Procedures For Pendant Mounting

Note: When installing the dome (bracket mount), as to the usage of dustproof sponge and waterproof tape, please refer to **Appendix III** and **Appendix IV** separately.

Easily install your super dome in below 9 steps:

1. Place the pendant mount base at a suitable position against firm ceiling, and secure it with expansion bolts. Pull the wiring through the base hole.

For dimensional diagram of the pendant mount base, please refer to the following figure.

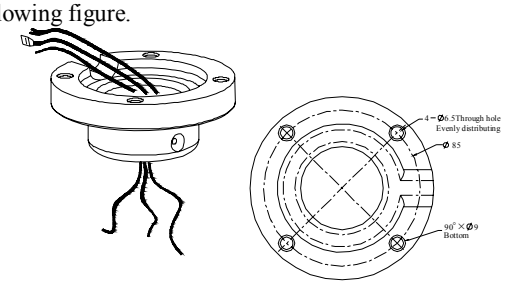

Indoor mounting

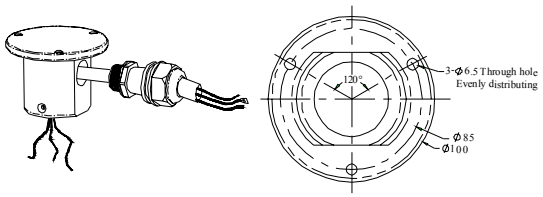

Outdoor mounting

Figure 3-35. Installing Mount Base

2. Screw the suspender into the pendant mount base, and then the housing holder into the suspender. Secure the connections with holding screws. Pull the wiring through the three connected accessories.

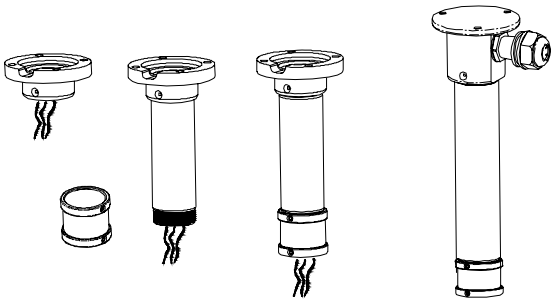

Indoor Outdoor

Figure 3-36. Installing Suspender and Housing Holder

3. Take out the upper housing from the dome package. Loosen the bolt that holds the connection circuit board, and lift the board to make an opening for wiring.

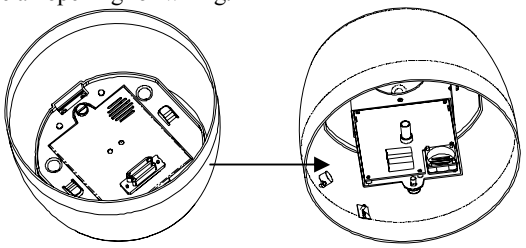

Figure 3-37. Lifting Connection Board

4. Pull the cables through the opening, and then screw the upper housing onto the housing holder. Secure the connection with two holding screws.

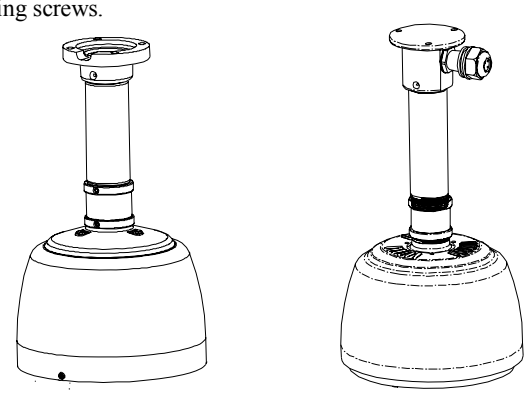

Indoor mounting Outdoor mounting

Figure 3-38. Installing Housing

5. Connect system cables (power, communication and video) to the connection circuit board inside the housing. For outdoor dome, make sure that the heater and fan are also properly connected. Then, push the board back to its original position, and tighten the holding screw to close the opening.

6. Take out the dome drive from the dome package. Set the camera ID by configuring the DIP switch S1. Set the communication baud rate and protocol by configuring the DIP switch S2. For detail on how to configure the DIP switch, please refer to **Appendix I** and **II**.

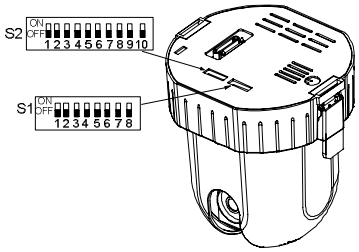

Figure 3-39. DIP Switch S1, S2

7. Line up the two tabs located on the upper side of the dome drive with the corresponding grooves in the housing. Insert both tabs into the grooves. Push up the dome insert until both tabs click into place. Be sure that you hear two clicks.

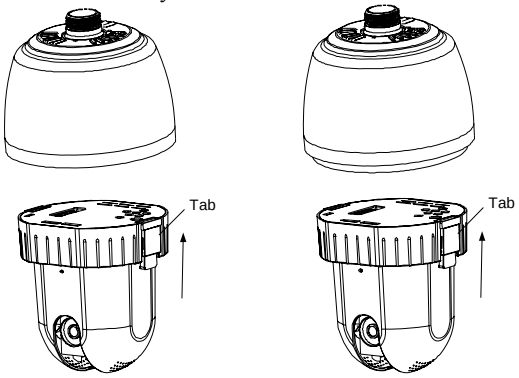

Indoor mounting Outdoor mounting

Figure 3-40. Installing Dome Drive

8. Take out the dome bubble from the dome package and fix the safety cord. As one end of safety cord has already fixed to the upper housing, and the other end should be tied to the dome bubble. (For outdoor domes, at the same time, connect cable terminal of temperature control switch in the housing with that of heater in the dome bubble. Position the junction in the spacing between heater gasket and outer space of the dome bubble). At last, locate dome bubble onto upper housing in correct direction and line up the screw holes of the dome bubble with corresponding holes on the housing, and then secure the cover with supplied screws.

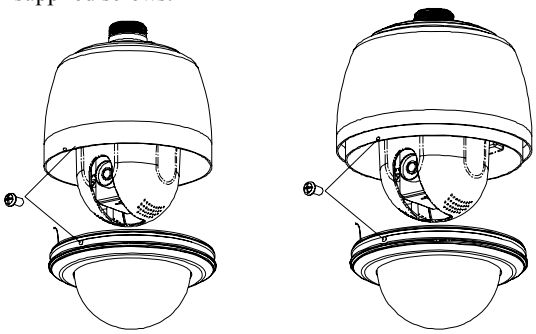

Indoor mounting Outdoor mounting

Figure 3-41. Installing Dome Bubble

9. Turn on the power. The dome will pan, tilt, and zoom to initiate system parameters as well as to verify the normal operation of the dome drive.

After the initiation sequence, the dome will stop and be ready for programming and operation.

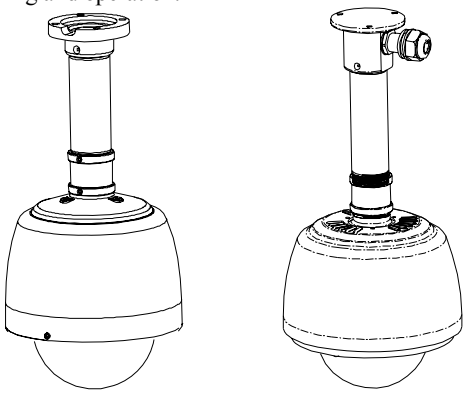

Indoor mounting Outdoor mounting

Figure 3-42. Pendant mounting

Note: Compared to standard super dome, there are 2 cables pulled out through the housing of IP dome: network cable and power supply cable as below:

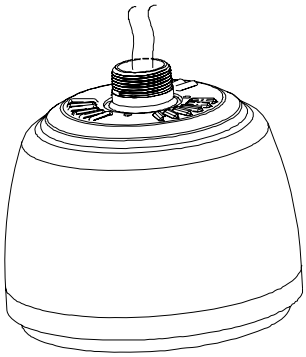

Figure 3-43. IP dome housing

Chapter IV Assembly and Disassembly Procedures

Assembly Procedures

Line up the two tabs located on the upper side of the dome drive with the corresponding grooves in the housing. Insert both tabs into the grooves. Push up the dome insert until both tabs click into place. Be sure that you hear two clicks.

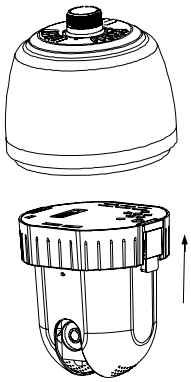

Disassembly Procedures

Disassembly is the inverse procedure of installation. Ensure that the disassembly must be carried out after the dome power has been turn off.

Note: The following instructs how to disassemble the dome drive:

Hold the dome drive at the bottom of the two tabs located on the upper side of the dome drive. Then use your fingers to press inward until they are divorced from the grooves in the housing. Keeping the tabs and the grooves at this status, pull the dome drive down slowly.

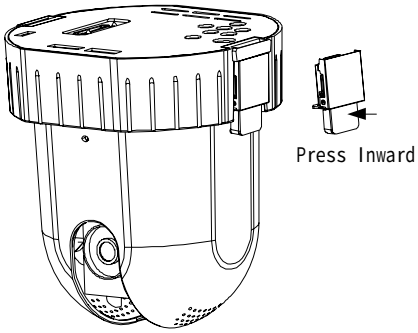

Appendix I Setting Camera ID

Camera ID can be set via the 8-position DIP switch S1.

Note: PELCO P Protocol 255, PELCO D Protocol 254 and INFINOVA Protocol 128.

For details on camera ID settings, please refer to the following table.

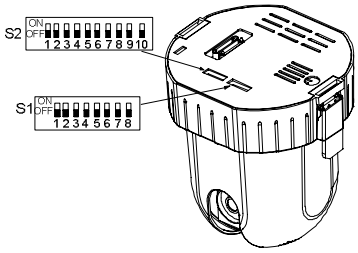

I=ON, O=OFF

Camera ID	Switch Positions							
	1	2	3	4	5	6	7	8
1	O	O	O	O	O	O	O	O
2	I	O	O	O	O	O	O	O
3	O	I	O	O	O	O	O	O
4	I	I	O	O	O	O	O	O
5	O	O	I	O	O	O	O	O
6	I	O	I	O	O	O	O	O
7	O	I	I	O	O	O	O	O
8	I	I	I	O	O	O	O	O
9	O	O	O	I	O	O	O	O
10	I	O	O	I	O	O	O	O
11	O	I	O	I	O	O	O	O
12	I	I	O	I	O	O	O	O
13	O	O	I	I	O	O	O	O
14	I	O	I	I	O	O	O	O
15	O	I	I	I	O	O	O	O
16	I	I	I	I	O	O	O	O
17	O	O	O	O	I	O	O	O
18	I	O	O	O	I	O	O	O
19	O	I	O	O	I	O	O	O
20	I	I	O	O	I	O	O	O
21	O	O	I	O	I	O	O	O
22	I	O	I	O	I	O	O	O
23	O	I	I	O	I	O	O	O
24	I	I	I	O	I	O	O	O
25	O	O	O	I	I	O	O	O
26	I	O	O	I	I	O	O	O
27	O	I	O	I	I	O	O	O
28	I	I	O	I	I	O	O	O
29	O	O	I	I	I	O	O	O
30	I	O	I	I	I	O	O	O
31	O	I	I	I	I	O	O	O
32	I	I	I	I	I	O	O	O

I=ON,O=OFF

Camera ID	Switch Positions							
	1	2	3	4	5	6	7	8
33	O	O	O	O	O	I	O	O
34	I	O	O	O	O	I	O	O
35	O	I	O	O	O	I	O	O
36	I	I	O	O	O	I	O	O
37	O	O	I	O	O	I	O	O
38	I	O	I	O	O	I	O	O
39	O	I	I	O	O	I	O	O
40	I	I	I	O	O	I	O	O
41	O	O	O	I	O	I	O	O
42	I	O	O	I	O	I	O	O
43	O	I	O	I	O	I	O	O
44	I	I	O	I	O	I	O	O
45	O	O	I	I	O	I	O	O
46	I	O	I	I	O	I	O	O
47	O	I	I	I	O	I	O	O
48	I	I	I	I	O	I	O	O
49	O	O	O	O	I	I	O	O
50	I	O	O	O	I	I	O	O
51	O	I	O	O	I	I	O	O
52	I	I	O	O	I	I	O	O
53	O	O	I	O	I	I	O	O
54	I	O	I	O	I	I	O	O
55	O	I	I	O	I	I	O	O
56	I	I	I	O	I	I	O	O
57	O	O	O	I	I	I	O	O
58	I	O	O	I	I	I	O	O
59	O	I	O	I	I	I	O	O
60	I	I	O	I	I	I	O	O
61	O	O	I	I	I	I	O	O
62	I	O	I	I	I	I	O	O
63	O	I	I	I	I	I	O	O
64	I	I	I	I	I	I	O	O

I=ON,O=OFF

Camera ID	Switch Positions							
	1	2	3	4	5	6	7	8
65	O	O	O	O	O	O	I	O
66	I	O	O	O	O	O	I	O
67	O	I	O	O	O	O	I	O
68	I	I	O	O	O	O	I	O
69	O	O	I	O	O	O	I	O
70	I	O	I	O	O	O	I	O
71	O	I	I	O	O	O	I	O
72	I	I	I	O	O	O	I	O
73	O	O	O	I	O	O	I	O
74	I	O	O	I	O	O	I	O
75	O	I	O	I	O	O	I	O
76	I	I	O	I	O	O	I	O
77	O	O	I	I	O	O	I	O
78	I	O	I	I	O	O	I	O
79	O	I	I	I	O	O	I	O
80	I	I	I	I	O	O	I	O
81	O	O	O	O	I	O	I	O
82	I	O	O	O	I	O	I	O
83	O	I	O	O	I	O	I	O
84	I	I	O	O	I	O	I	O
85	O	O	I	O	I	O	I	O
86	I	O	I	O	I	O	I	O
87	O	I	I	O	I	O	I	O
88	I	I	I	O	I	O	I	O
89	O	O	O	I	I	O	I	O
90	I	O	O	I	I	O	I	O
91	O	I	O	I	I	O	I	O
92	I	I	O	I	I	O	I	O
93	O	O	I	I	I	O	I	O
94	I	O	I	I	I	O	I	O
95	O	I	I	I	I	O	I	O
96	I	I	I	I	I	O	I	O

I=ON,O=OFF

Camera ID	Switch Positions							
	1	2	3	4	5	6	7	8
97	O	O	O	O	O	I	I	O
98	I	O	O	O	O	I	I	O
99	O	I	O	O	O	I	I	O
100	I	I	O	O	O	I	I	O
101	O	O	I	O	O	I	I	O
102	I	O	I	O	O	I	I	O
103	O	I	I	O	O	I	I	O
104	I	I	I	O	O	I	I	O
105	O	O	O	I	O	I	I	O
106	I	O	O	I	O	I	I	O
107	O	I	O	I	O	I	I	O
108	I	I	O	I	O	I	I	O
109	O	O	I	I	O	I	I	O
110	I	O	I	I	O	I	I	O
111	O	I	I	I	O	I	I	O
112	I	I	I	I	O	I	I	O
113	O	O	O	O	I	I	I	O
114	I	O	O	O	I	I	I	O
115	O	I	O	O	I	I	I	O
116	I	I	O	O	I	I	I	O
117	O	O	I	O	I	I	I	O
118	I	O	I	O	I	I	I	O
119	O	I	I	O	I	I	I	O
120	I	I	I	O	I	I	I	O
121	O	O	O	I	I	I	I	O
122	I	O	O	I	I	I	I	O
123	O	I	O	I	I	I	I	O
124	I	I	O	I	I	I	I	O
125	O	O	I	I	I	I	I	O
126	I	O	I	I	I	I	I	O
127	O	I	I	I	I	I	I	O
128	I	I	I	I	I	I	I	O

I=ON, O=OFF

Camera ID	Switch Positions							
	1	2	3	4	5	6	7	8
129	O	O	O	O	O	O	O	I
130	I	O	O	O	O	O	O	I
131	O	I	O	O	O	O	O	I
132	I	I	O	O	O	O	O	I
133	O	O	I	O	O	O	O	I
134	I	O	I	O	O	O	O	I
135	O	I	I	O	O	O	O	I
136	I	I	I	O	O	O	O	I
137	O	O	O	I	O	O	O	I
138	I	O	O	I	O	O	O	I
139	O	I	O	I	O	O	O	I
140	I	I	O	I	O	O	O	I
141	O	O	I	I	O	O	O	I
142	I	O	I	I	O	O	O	I
143	O	I	I	I	O	O	O	I
144	I	I	I	I	O	O	O	I
145	O	O	O	O	I	O	O	I
146	I	O	O	O	I	O	O	I
147	O	I	O	O	I	O	O	I
148	I	I	O	O	I	O	O	I
149	O	O	I	O	I	O	O	I
150	I	O	I	O	I	O	O	I
151	O	I	I	O	I	O	O	I
152	I	I	I	O	I	O	O	I
153	O	O	O	I	I	O	O	I
154	I	O	O	I	I	O	O	I
155	O	I	O	I	I	O	O	I
156	I	I	O	I	I	O	O	I
157	O	O	I	I	I	O	O	I
158	I	O	I	I	I	O	O	I
159	O	I	I	I	I	O	O	I
160	I	I	I	I	I	O	O	I

I=ON, O=OFF

Camera ID	Switch Positions							
	1	2	3	4	5	6	7	8
161	O	O	O	O	O	I	O	I
162	I	O	O	O	O	I	O	I
163	O	I	O	O	O	I	O	I
164	I	I	O	O	O	I	O	I
165	O	O	I	O	O	I	O	I
166	I	O	I	O	O	I	O	I
167	O	I	I	O	O	I	O	I
168	I	I	I	O	O	I	O	I
169	O	O	O	I	O	I	O	I
170	I	O	O	I	O	I	O	I
171	O	I	O	I	O	I	O	I
172	I	I	O	I	O	I	O	I
173	O	O	I	I	O	I	O	I
174	I	O	I	I	O	I	O	I
175	O	I	I	I	O	I	O	I
176	I	I	I	I	O	I	O	I
177	O	O	O	O	I	I	O	I
178	I	O	O	O	I	I	O	I
179	O	I	O	O	I	I	O	I
180	I	I	O	O	I	I	O	I
181	O	O	I	O	I	I	O	I
182	I	O	I	O	I	I	O	I
183	O	I	I	O	I	I	O	I
184	I	I	I	O	I	I	O	I
185	O	O	O	I	I	I	O	I
186	I	O	O	I	I	I	O	I
187	O	I	O	I	I	I	O	I
188	I	I	O	I	I	I	O	I
189	O	O	I	I	I	I	O	I
190	I	O	I	I	I	I	O	I
191	O	I	I	I	I	I	O	I
192	I	I	I	I	I	I	O	I

I=ON, O=OFF

Camera ID	Switch Positions							
	1	2	3	4	5	6	7	8
193	O	O	O	O	O	O	I	I
194	I	O	O	O	O	O	I	I
195	O	I	O	O	O	O	I	I
196	I	I	O	O	O	O	I	I
197	O	O	I	O	O	O	I	I
198	I	O	I	O	O	O	I	I
199	O	I	I	O	O	O	I	I
200	I	I	I	O	O	O	I	I
201	O	O	O	I	O	O	I	I
202	I	O	O	I	O	O	I	I
203	O	I	O	I	O	O	I	I
204	I	I	O	I	O	O	I	I
205	O	O	I	I	O	O	I	I
206	I	O	I	I	O	O	I	I
207	O	I	I	I	O	O	I	I
208	I	I	I	I	O	O	I	I
209	O	O	O	O	I	O	I	I
210	I	O	O	O	I	O	I	I
211	O	I	O	O	I	O	I	I
212	I	I	O	O	I	O	I	I
213	O	O	I	O	I	O	I	I
214	I	O	I	O	I	O	I	I
215	O	I	I	O	I	O	I	I
216	I	I	I	O	I	O	I	I
217	O	O	O	I	I	O	I	I
218	I	O	O	I	I	O	I	I
219	O	I	O	I	I	O	I	I
220	I	I	O	I	I	O	I	I
221	O	O	I	I	I	O	I	I
222	I	O	I	I	I	O	I	I
223	O	I	I	I	I	O	I	I
224	I	I	I	I	I	O	I	I

I=ON, O=OFF

Camera ID	Switch Positions							
	1	2	3	4	5	6	7	8
225	O	O	O	O	O	I	I	I
226	I	O	O	O	O	I	I	I
227	O	I	O	O	O	I	I	I
228	I	I	O	O	O	I	I	I
229	O	O	I	O	O	I	I	I
230	I	O	I	O	O	I	I	I
231	O	I	I	O	O	I	I	I
232	I	I	I	O	O	I	I	I
233	O	O	O	I	O	I	I	I
234	I	O	O	I	O	I	I	I
235	O	I	O	I	O	I	I	I
236	I	I	O	I	O	I	I	I
237	O	O	I	I	O	I	I	I
238	I	O	I	I	O	I	I	I
239	O	I	I	I	O	I	I	I
240	I	I	I	I	O	I	I	I
241	O	O	O	O	I	I	I	I
242	I	O	O	O	I	I	I	I
243	O	I	O	O	I	I	I	I
244	I	I	O	O	I	I	I	I
245	O	O	I	O	I	I	I	I
246	I	O	I	O	I	I	I	I
247	O	I	I	O	I	I	I	I
248	I	I	I	O	I	I	I	I
249	O	O	O	I	I	I	I	I
250	I	O	O	I	I	I	I	I
251	O	I	O	I	I	I	I	I
252	I	I	O	I	I	I	I	I
253	O	O	I	I	I	I	I	I
254	I	O	I	I	I	I	I	I
255	O	I	I	I	I	I	I	I

Appendix II Setting Communication Baud Rate and Protocol

Communication baud rate and protocol of the domes can be set via 10--position DIP Switch S2. Refer to the following tables for S2 setting:

Note: Refer to the tab for detailed information and below table is for reference only.

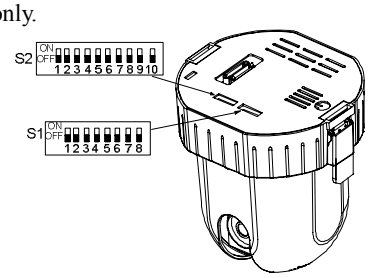

10-position DIP Switch

V1700A:

S2-interface Selection										
Dip Switch	**1**	**2**	**3**	**4**	**5**	**6**	**7**	**8**	**9**	**10**
Infinova	off	off	off	on	off					
RS-422-D	off	on	off	off	off					
RS-485-P	on	off	off	off	off					
UP the Coax	on	on	on	off	off					
2400 Baud						off	off	off		
4800 Baud						on	off	off		
9600 Baud						off	on	off		
485 terminal									off	on

V1700N-L:

S2-interface Selection										
Dip Switch	**1**	**2**	**3**	**4**	**5**	**6**	**7**	**8**	**9**	**10**
Infinova	off	off	off	on	off					
2400 Baud						off	off	off		
4800 Baud						on	off	off		
9600 Baud						off	on	off		
485 terminal									off	on

V1700N-S:

S2-interface Selection										
Dip Switch	**1**	**2**	**3**	**4**	**5**	**6**	**7**	**8**	**9**	**10**
RS-485-P	on	off	off	off	off					
2400 Baud						off	off	off		
4800 Baud						on	off	off		
9600 Baud						off	on	off		
485 terminal									off	on

Appendix III Usage of Dustproof Sponge

When installing the dome (bracket mount), use the black dustproof sponge enclosed in the box to prevent dust from entering the dome, which may lead to failure of internal circuit board, and to prevent vapor condense on the bubble, which may reduce clearness.

Installation of dustproof sponge is shown below:

1. Take the housing assembly from the package, and loosen the bolts that fix the wire holder, and then lift the board and arrange wires well (as shown in figure below, left).

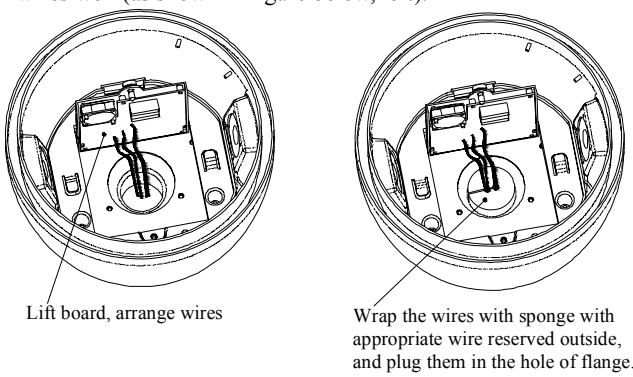

Installation Guide View

2. Wrap the wires with sponge with appropriate wire (about 100mm) reserved outside (as shown in figure above, right), and plug the sponge and wires in the hole of flange. The bottom of sponge should be in flush with the hole edge of the flange.
3. Connect the wires to the proper position of the power board.
4. Resume the position of board and tighten the bolts.

No change to installation steps of other parts.

Appendix IV Usage of Waterproof Tape

When bracket mounting is selected, before the threaded part of housing is screwed into the threaded hole of bracket, it is recommended to wrap the threaded part of housing assembly with waterproof tape to prevent water inleakage which may lead to failure of internal circuit.

Installation of waterproof tape is shown below:

1. Take waterproof tape from package, and pull proper tape, which must be maintained undeformed.

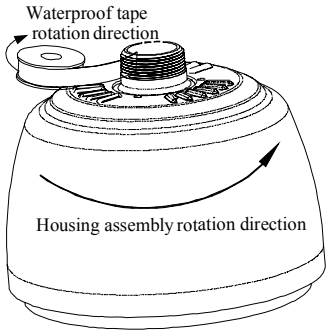

Installation Guide View

2. As shown in the figure above, wrap the thread with waterproof tape in reversal direction of the thread, and make the tape attach to the thread firmly with no ripple.
3. Cut the tape, and screw the threaded part of the housing assembly to the threaded hole of bracket.

No change to installation steps of other parts.

Note: In the case of bracket mounting, to prevent the water leakage, users shall use the waterproof tape following the instructions in the appendix strictly. Otherwise, users shall be responsible for the abnormality circuit of the dome caused by the water leakage.

Infinova
51 Stouts Lane,
Monmouth Junction, NJ 08852, U.S.A.
Tel: 1-888-685-2002 (USA only)
1-732-355-9100
Fax: 1-732-355-9101
sales@infinova.com

V2.4 0906